ISOM Digiware F-60

Fault-locating module

for power distribution and medical facilities

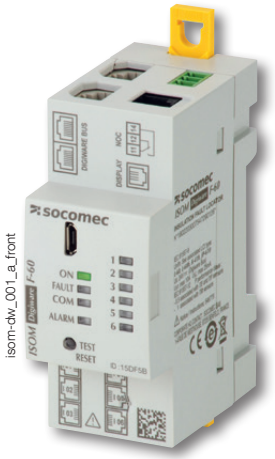

ISOM Digiware F-60

Configuration with Easy Config System.

Function

With **ISOM Digiware F-60**, you can measure both the insulation and load current (up to 6 inputs).

ISOM Digiware F-60 locates highly resistive or transient faults.

It detects the locating signal generated by the ISOM Digiware L-60 IMD through ΔIP locating core balance transformers linked to ISOM T-15 adapters.

TE, TR and TF core balance transformers use a direct RJ12 connection. Use an ISOM T-15 adapter for the ΔIP locating core balance transformers (attached directly to the core balance transformer or on a DIN rail).

It comes in a heavy-duty version for extreme environments (ISOM Digiware F-60t).

Advantages

Simultaneous scanning

Ensures fast and reliable detection of even transient faults, throughout the system.

OhmScanner solution

Our OhmScanner technology allows you to track the system's general degree of insulation, while regularly measuring the insulation of each circuit in detail.

Fine-tuned insulation

Resistive and capacitive breakdown for each circuit.

2 in 1

You need just one module to monitor insulation and track load consumption. Coupled with a DIRIS Digiware U voltage module, it provides the I, U, E, P measurement of each monitored circuit. Adding a DIRIS Digiware I-3x module gives you additional features including quality monitoring, alert thresholds and measurement logs.

Boost synchronisation

Reinforced immunity to network disturbances.

Need the help of an expert?

EXPERT SERVICES

Socomec offers a range of services to help you optimise your electrical installations and increase efficiency:

- Startup
- Checking the insulation monitoring architecture (NFC 15100)
- Fault-finding
- Training on the handheld fault location tool, ISOM PS-62

To find out more, ask your Socomec representative.

The solution for

- Industries
- Energy production
- Naval, military and railway infrastructures
- Healthcare facilities



Strong points

- Simultaneous scanning
- OhmScanner solution
- Fine-tuned insulation
- 2 in 1
- Boost synchronisation

Integrated technologies

PreciSense OhmScanner

For more information, visit www.socomec.com

Conformity to standards

- IEC 61557-9
- IEC 61557-12
- ISO 14025

Approvals and certifications

- Naval certifications(1)

(1) Certification in progress.

Create your project

- Find the best Digiware configuration: **www.meter-selector.com**

METER SELECTOR DIGITAL TOOL AVAILABLE

Applications

The ISOM Digiware F-60 locating unit is more commonly used in industrial environments for IT neutral system power networks.
Synchronised with the ISOM Digiware L-60 insulation monitoring device via the Digiware bus, it increases system efficiency for networks with interference.

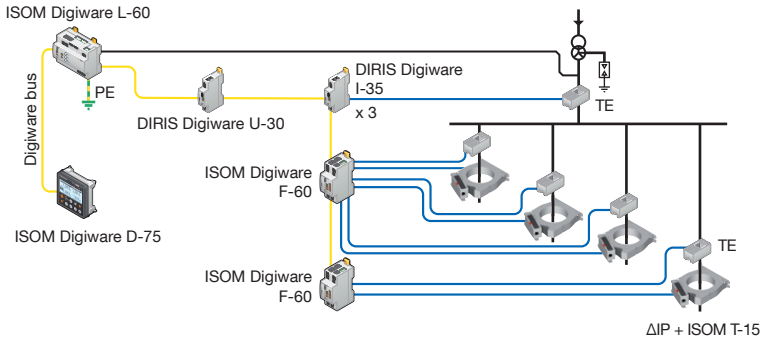

isom-dw_036_a_1_gb_cat.ai

Front panel

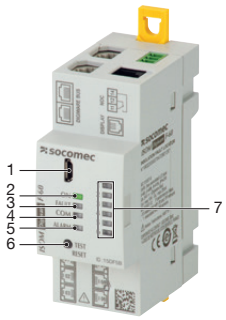

<Sans lien d'intersection>

1. USB port for configuration.
2. ON indicator. Lights up when the device is active.
3. FAULT indicator for system alerts (core transformer connections, etc.)
4. COM indicator. Flashes when the communication bus is active.
5. ALARM indicator. Lights up if there is an alarm on one of the channels 1 to 6.
6. TEST / RESET button. Starts the autotest (long press) and resets alerts (short press). Used for self-addressing in configuration mode.
7. Individual LED alarm signals for each channel 1 to 6.

Dimensions (mm)

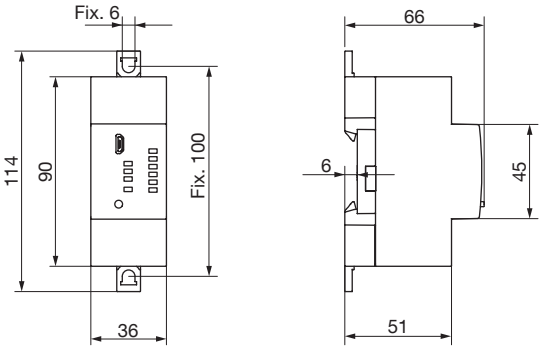

isom-dw_037_a_1_x_cat.ai

Terminals and connections

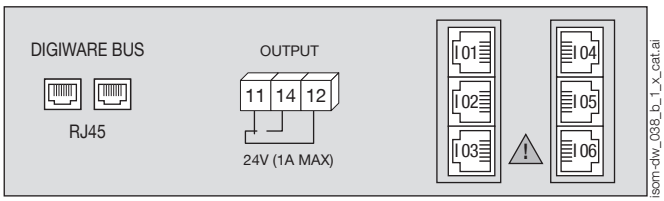

isom-dw_038_b_1_x_cat.ai

DIGIWARE BUS: Digiware bus connection to other Digiware units
11 - 12 - 14: alarm relay output

I01 - I02 - I03 - I04 - I05 - I06: ISOM T-15 connection (to core transformers) and current sensors TE/TR/TF

Characteristics

Network voltage U_n	
AC range	As ISOM Digiware L-60
Auxiliary power supply U_s	
Power supply voltage	Digiware bus
Max. consumption	0.5 W
Scanning channels	
Number of channels per device	6
Locating current threshold	Adjustable 0.2 to 25 mA
Insulation threshold	Adjustable 0.5 kΩ to 400 kΩ
Connection	
Number of core balance transformers	6 via each ISOM T-15 adapter
Type of adapter connector	Specific Socomec cable with RJ12 connectors
Output contacts	
Number of contacts	1
Contact type	Changeover switch
AC nominal voltage	24 V
DC nominal voltage	24 V
Steady-state current	1 A
Preset operating mode	Standby
Operating conditions	
Operating temperature	-10 to +55 °C
Storage temperature	-40 to 70 °C
Relative humidity	90% at 55 °C
Operating conditions (version t)	
Operating temperature	-10 to 70 °C
Storage temperature	-40 to 85 °C
Relative humidity	97 % at 55 °C

References

Standard locating model	**Alert threshold**	**Reference**
F-60	0.5 to 400 kΩ / 0.2 to 25 mA	4729 **0126**
Heavy-duty locating model	**Alert threshold**	**Reference**
F-60t	0.5 to 400 kΩ / 0.2 to 25 mA	4729 **0127**
Accessories		**Reference**
ISOM T-15 adapter for differential core balance transformer (essential for ISOM Digiware F-60 to work)		4729 **0590**
ISOM T-15 adapter for differential core balance transformer (essential for ISOM Digiware F-60t to work)		4729 **0591**
Specific RJ12 cables to connect to ISOM T-15		see "TE sensors"
Recessed/cutout mounting frame 36 x 46 mm		4729 **0190**
Digiware connection cables		
RJ45 cables for Digiware Bus		See "ISOM Digiware D-55 / D-75"